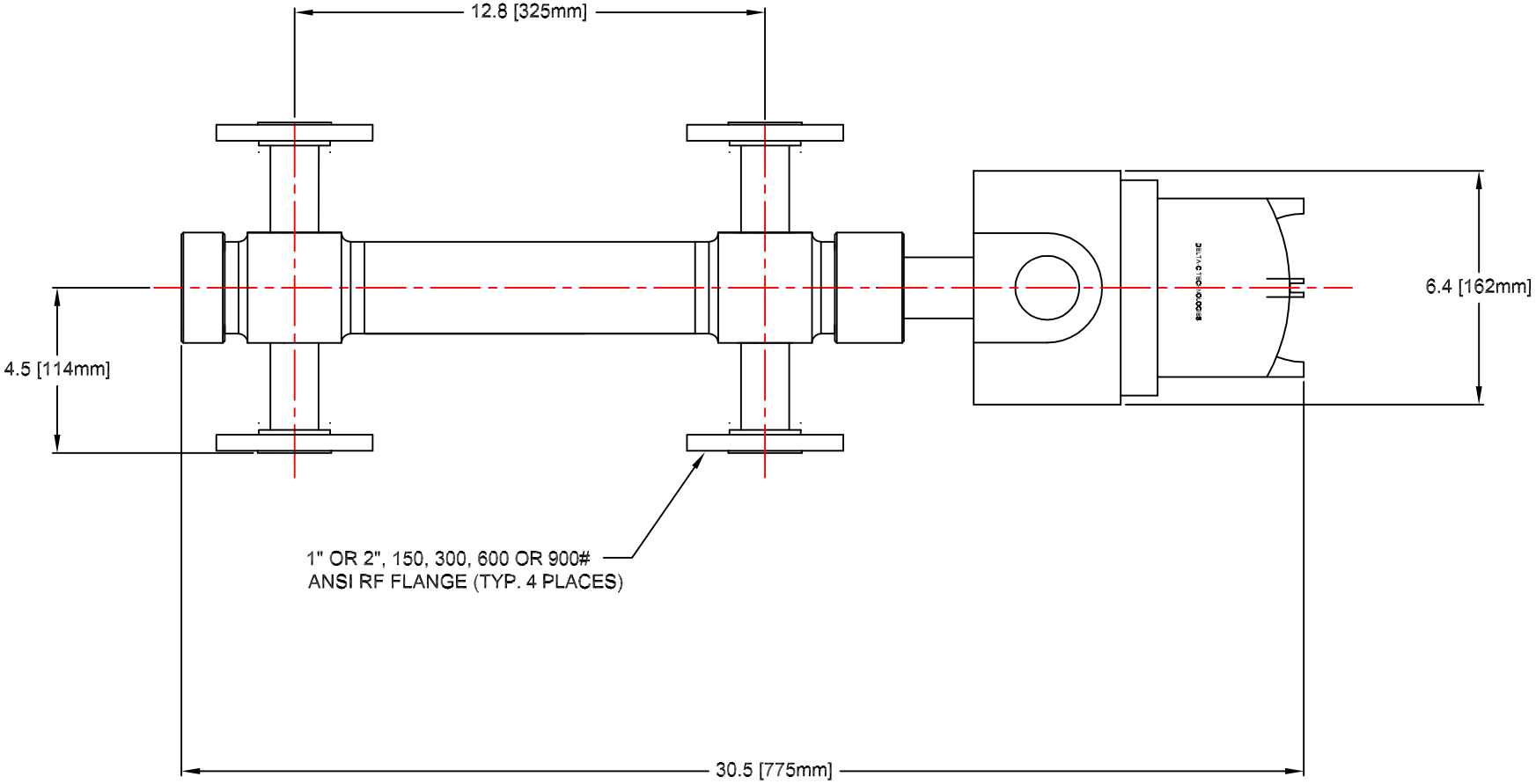

REV.	MATERIALS/DESCRIPTION	DATE	BY

ALL DIMENSIONS IN INCHES
UNLESS OTHERWISE SPECIFIED

TOLERANCES UNLESS OTHERWISE SPECIFIED

.X	± 0.030	FRACTIONS	± 1/16
.XX	± 0.010	ANGLES	± 0.5°
.XXX	±0.005		

DELTA - C TECHNOLOGIES INC.
ENDERBY, BRITISH COLUMBIA

DRAWN BY:	DFM
DATE:	JAN 18-07
APPROVED BY:	H. DOUBLET, P.ENG.
DATE:	JAN 18-07

TITLE: WATERCUT MONITOR
DC-1510F
H STYLE CONFIGURATION

SCALE: N.T.S

DRAWING #: DC-1510F-H

REV: 00